EUROPA

Data Sheet
EDS2221-001

This document must be retained for future reference.

It is the responsibility of the person installing the electrical equipment to ensure that the installation meets the requirements of the IET wiring regulations and is therefore 'fit for purpose'. Factors such as correct selection of components, cable sizing, protective devices and Earth bonding are all critical and should be checked prior to full testing and power-up. Any other regulations applicable to the equipment being installed such as the Machinery Directive and current health and safety legislation must also be adhered to.

All connections (including factory made) must be checked for the correct tightness prior to commissioning of the electrical installation.
All connections should also be inspected periodically to ensure correct tightness.

DO NOT USE POWER TOOLS ON THESE PRODUCTS

Saturn AC Isolators

20 & 32A 4 Pole (Smaller Enclosures)



Anthracite (AN)



Grey (G)

Features

- Available in anthracite and grey enclosure with yellow and red handle.
- IP66 rated enclosure.
- Robust polycarbonate enclosure: 960^0 flammability rated (IEC 60695-2-11), UV resistant, halogen free, and lower smoke generation.
- Interlocked rotary switch padlockable in the OFF position, with up to three padlocks.
- Multiple top, bottom and rear cable entry options.
- Retained screws on lid.

Data		Range	Units	SAT-IS204SG SAT-IS204SAN	SAT-IS324SG SAT-IS324SAN
Rated Operational Voltage Ue					
IEC & EN		Volts	V	690	690
Main Switch: Isolating Voltage up to		Volts	V	750	750
Rated Impulse Withstand Voltage Uimp		Volts	kV	6	6
Rated Uninterrupted Current Iu		Amps	A	20	32
Rated Operational Current Ie					
IEC & EN	AC-23A	Up to 690V	A	16	25
	AC-22A	Up to 690V	A	16	25
	AC-21A	Up to 690V	A	20	32
	AC-1	Up to 690V	A	20	32
Rated Operational Power AC-23A (50-60Hz)					
3 Phase		380 - 440V	kW	7.5	15
Rated Operational Power AC-3 (50-60Hz)					
3 Phase		380-440V	kW	4	11
Short Circuit Capacity (IEC)					
Max Fuse Size (Type gG)		Amps	A	20	32
Rated Fused Short Circuit Current		Amps	kA	30	30
Terminal Specification					
Single/ Multiple Strand Wire			Min-mm^2	2.5	2.5
			Max-mm^2	10	10
Fine-Strand Wire with Sleeve			Min-mm^2	0.75	0.75
			Max-mm^2	6	6
Recommended Tightening Torque			Nm	1.7	1.7

Europa House, Airport Way, Luton, Bedfordshire, LU2 9NH
Technical: 01582 692 444 technical@europa-plc.com
www.europa-plc.com

Saturn AC Isolators

20 & 32A 4 Pole (Smaller Enclosures)

Dimensional Drawings

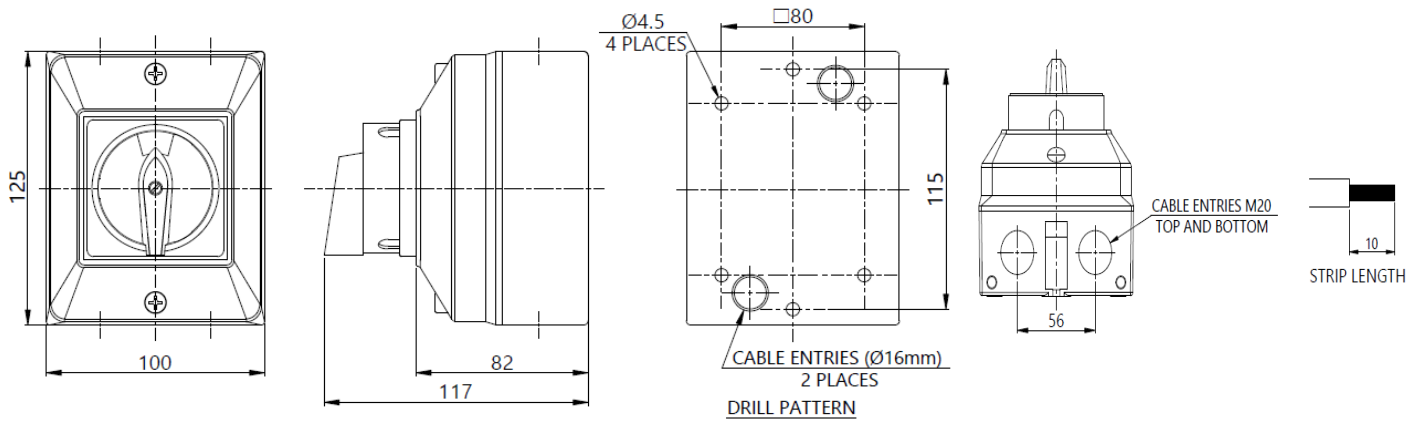

Mounting Details

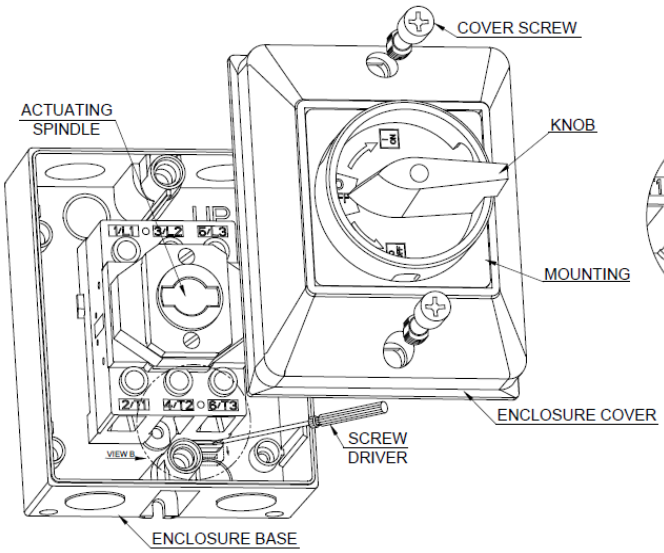

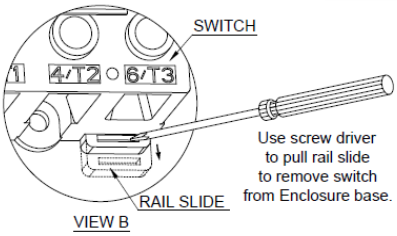

Terminal Configuration

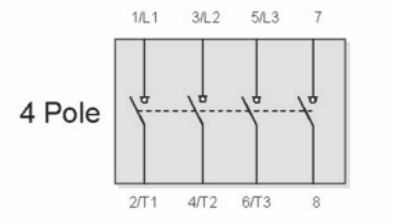

Procedure to dismantle the cover:

- Ensure the switch is in the OFF position
- Unscrew the cover screws and remove the cover
- For easy wiring, the switch can be removed from the base and then clicked back into place once wiring is complete
- After wiring ensure the profile orientation of the actuating spindle and knob shaft are in the same position
- Replace the cover and take care not to overtighten the screws (maximum tightening torque 1.2Nm)
- Do not install using power driven screwdrivers

Please note: There is no need to remove the switch handle in order to remove the cover